Salvatore Lieto (ASTALDI S.p.A.)
Paolo Perazzelli (ETH Zurich)

Auxiliary measures applied in the tunnel construction of the Jonica motorway

Kolloquium
Bauhilfsmassnahmen im Tunnelbau
ETH Zürich

Outline

Project overview

Tunnel construction problems and design changes

Conclusions

Project overview

Old motorway

Project overview

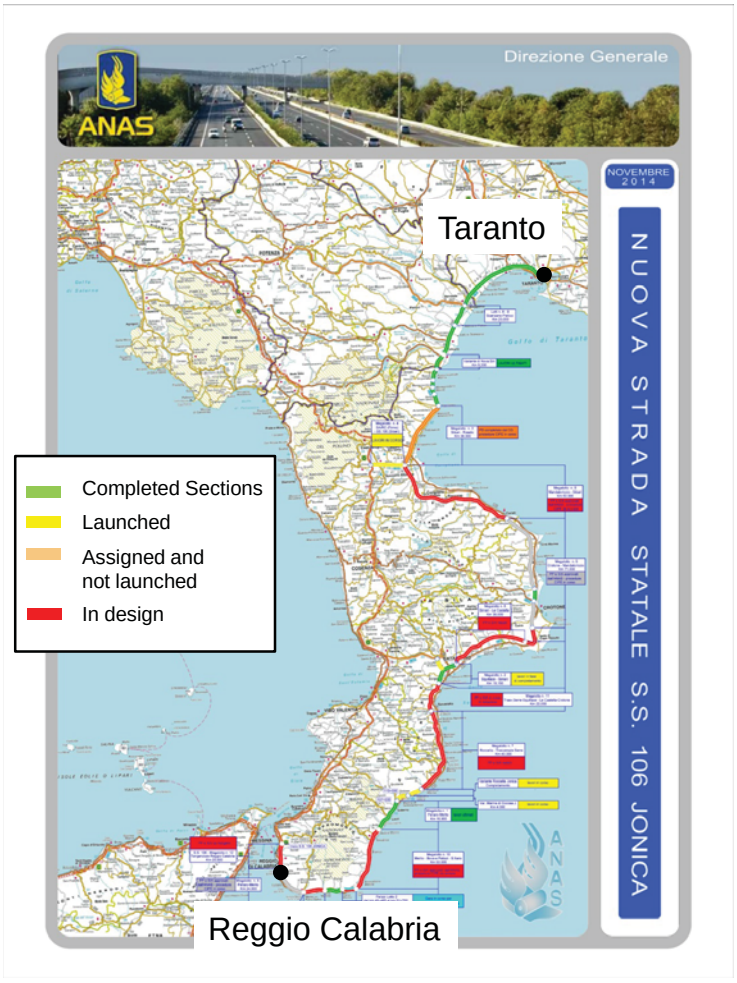

New motorway

Project overview

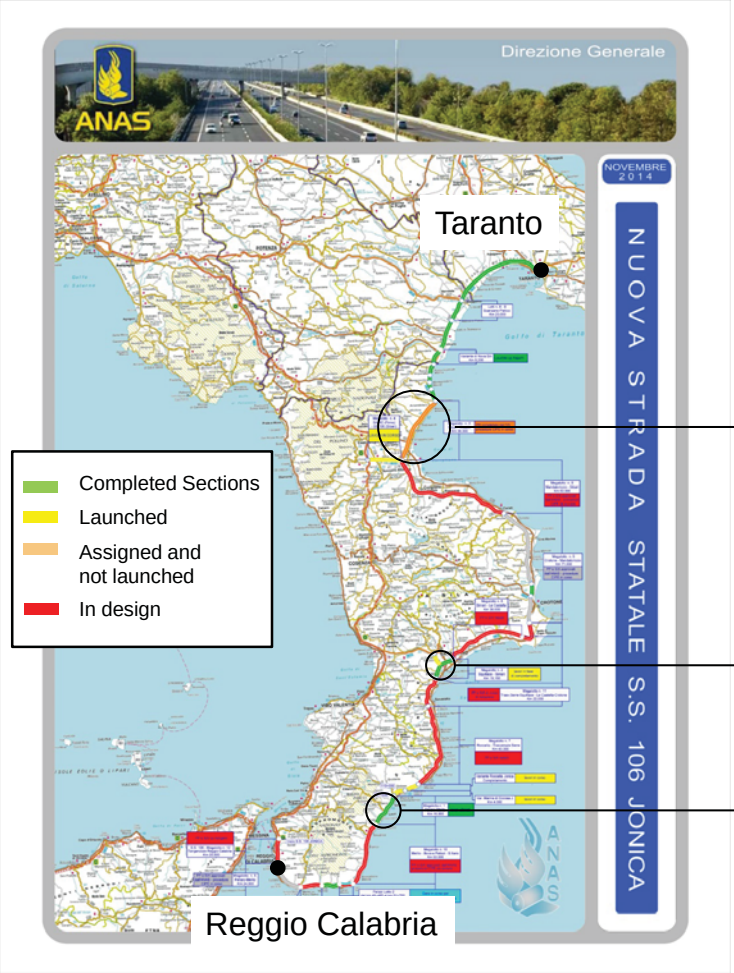

ASTALDI S.p.A. as General Contractor

Section 3 (Sibari - Roseto Capo Spulico)

Section 2 (Squillace - Simeri Crichi)

Section 1 (Gerace - Marina di Gioiosa Jonica)

Project overview

"Strada extraurbana principale – Cat. B (D.M. 5 novembre 2001) "

Two-lane dual carriageway (lane width 3.75 m)

Velocity: 70 - 120 km/h

Total length 11.3 km

Project overview

Costs of the project = 354 Ml €

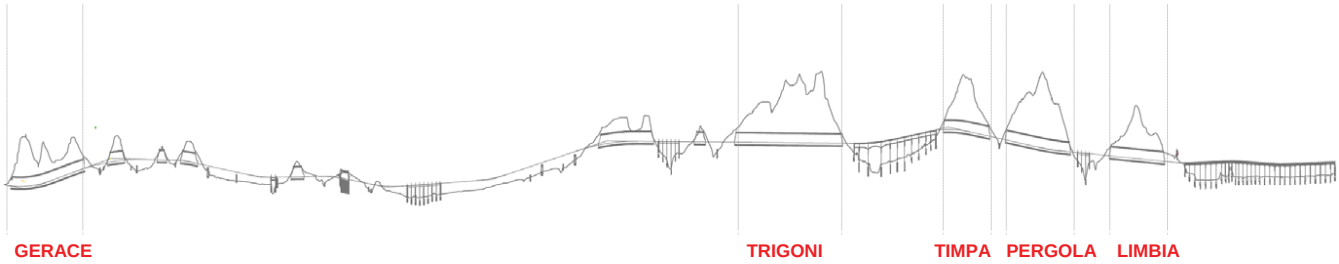

Two-tube tunnels
n° 5; *l* = 2.6 km

Two-tube cut-and-cover tunnels
n°7; *l* = 1.1 km

Viaducts
n° 7; *l* = 2.5 km

Project overview

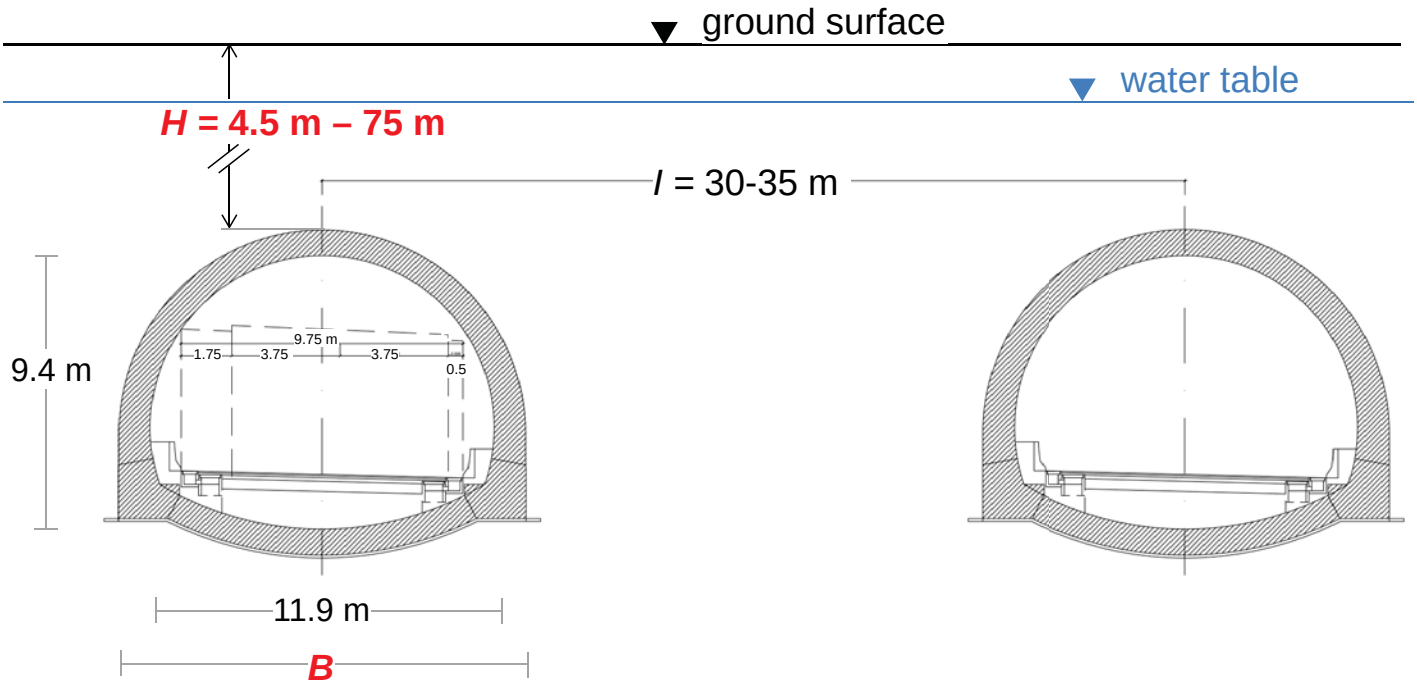

total length of the tunnels (*L* = 5.2 km)

35%	35%	30%
H>2B	*2B>H>B*	*H<B*

Project overview

Holocene

Qt Quaternary deposits (superficial deposits)

Lower Pleistocene

Pl Monte Narbone formation (gravelly sand)

Upper Pliocene

Ap Trubi formation (silty clay, clayey silt)

Sp Trubi formation (clayey sandy silt)

***z* [m]**

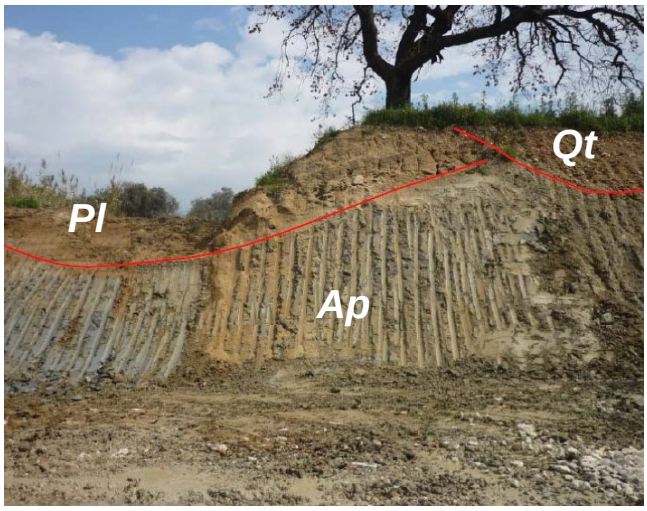

total length of the tunnels (L = 5.2 km)

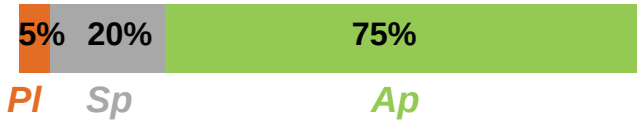

Outline

Project overview

Tunnel construction problems and design changes

Conclusions

Tunnel construction problems and design changes

ASTALDI

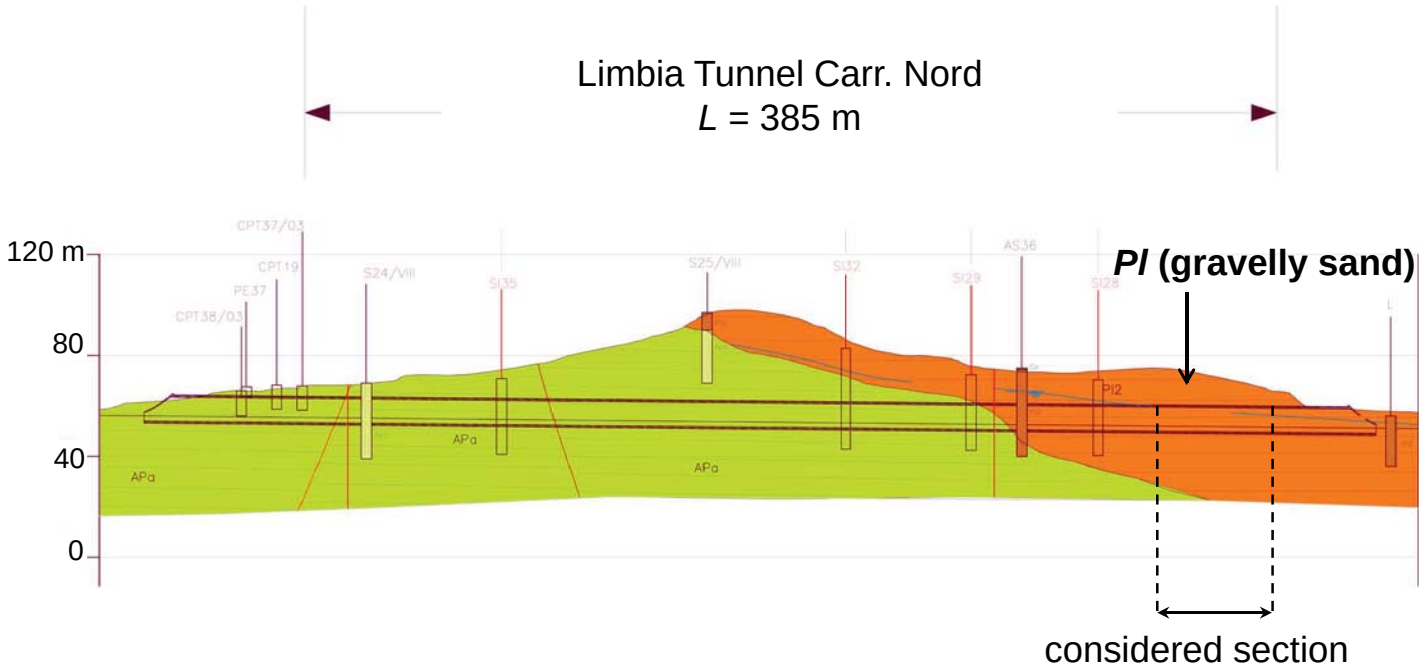

Tunnel construction problems and design changes

ASTALDI

PI : Monte Narbone formation (gravelly sand)

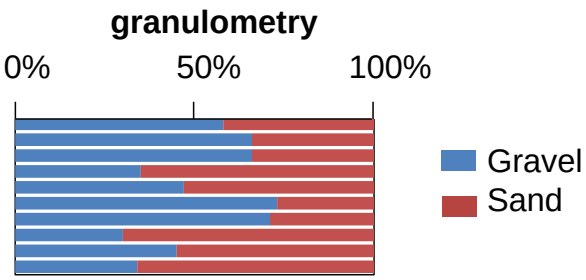

relative density D_r = 40 - 80%

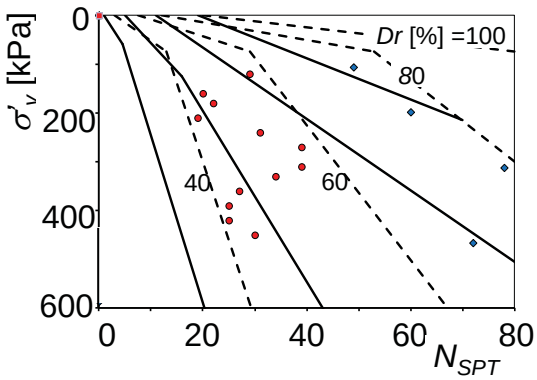

cohesion $c' = 0$

friction angle $\phi' = 30° – 45°$

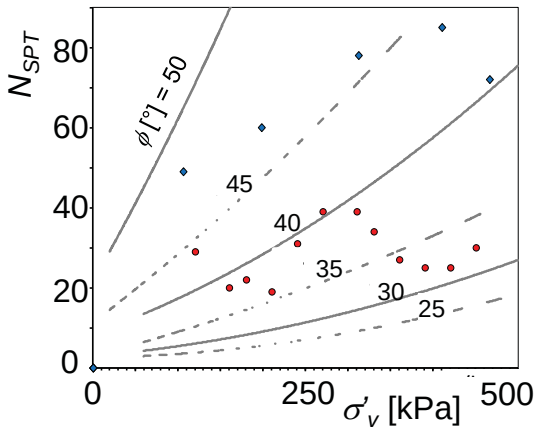

Tunnel construction problems and design changes

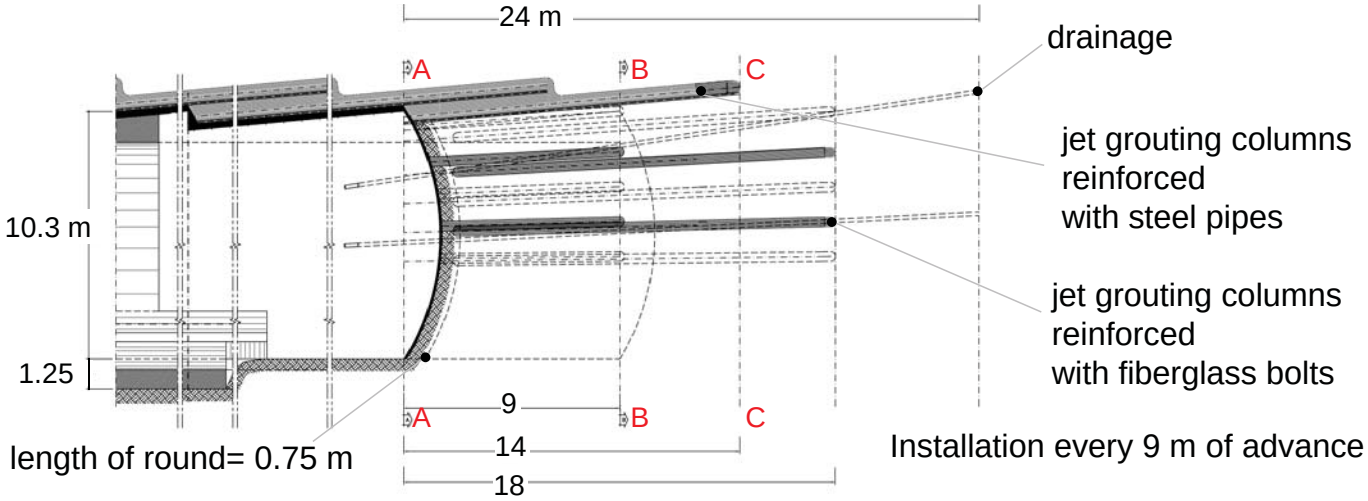

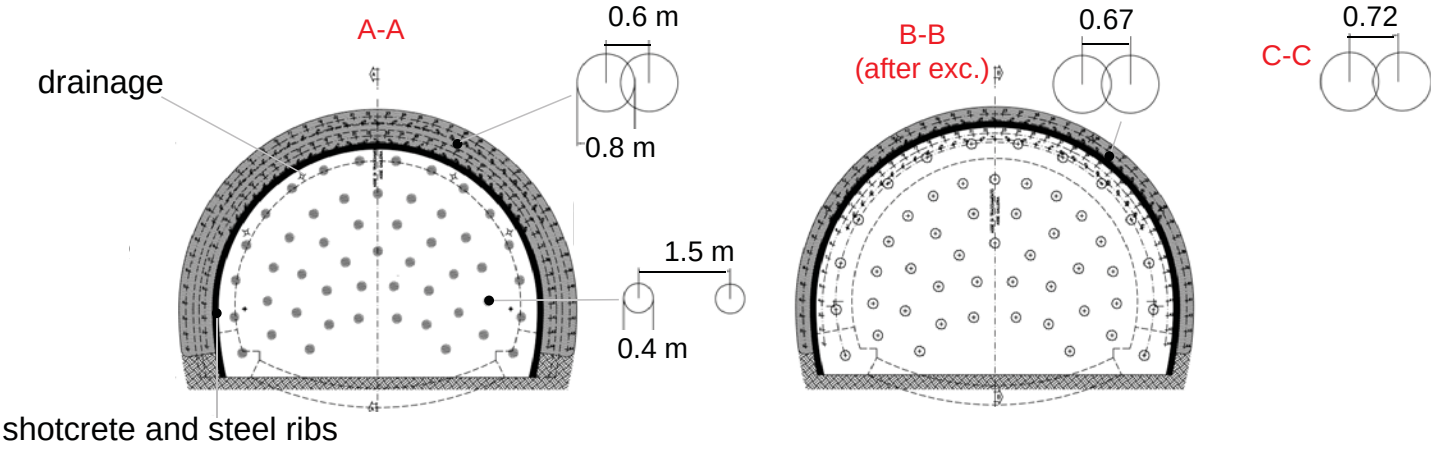

Tunnel construction problems and design changes

In situ jet grouting tests

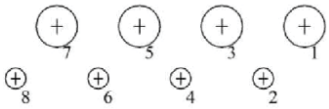

Mono fluid system

Column	[-]	1	3	5	7	2	4	6	8
Design diameter	[m]	**0.8**				**0.4**			
Column	[-]	1	3	5	7	2	4	6	8
Grout pressure	[MPa]	40	40	35	35	40	40	35	35
Number of nozzles	[-]	2	2	2	2	2	2	2	2
Nozzle Diameter	[mm]	2.4	2.4	2.4	2.4	2.4	2.4	2.4	2.4
W-C ratio by weight	[-]	1	1	1	1	1	1	1	1
Grout flow rate par nozzle	[l/min]	57	57	53	53	143	119	155	133
Injected grout volume per unit length	[l/m]	380	333	442	398	108	90	117	100
Average lifting speed of the monitor	[mm/s]	5	5.7	4	4.5	13.3	16.0	11.5	13.3
Observed diameter	**[m]**	**0.75 - 0.85**			**0.85 - 0.95**	**0.44 - 0.5**	**0.39 - 0.48**	**0.62 - 0.71**	**0.55 - 0.65**

Tunnel construction problems and design changes

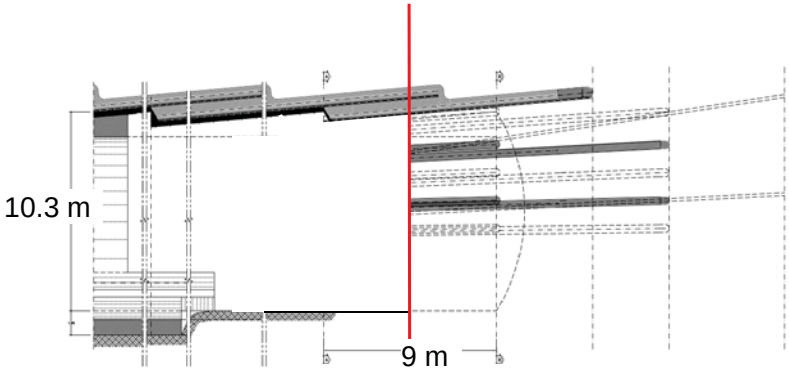

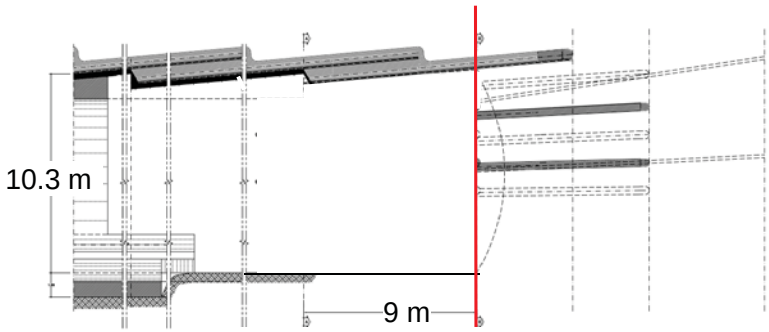

Tunnel construction problems and design changes

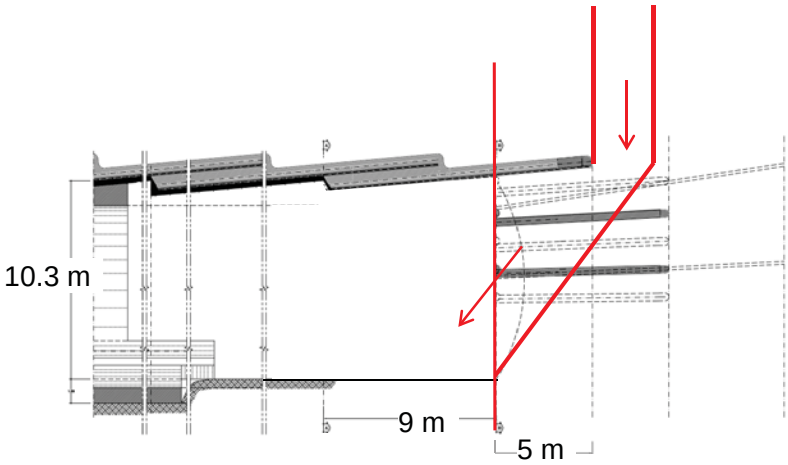

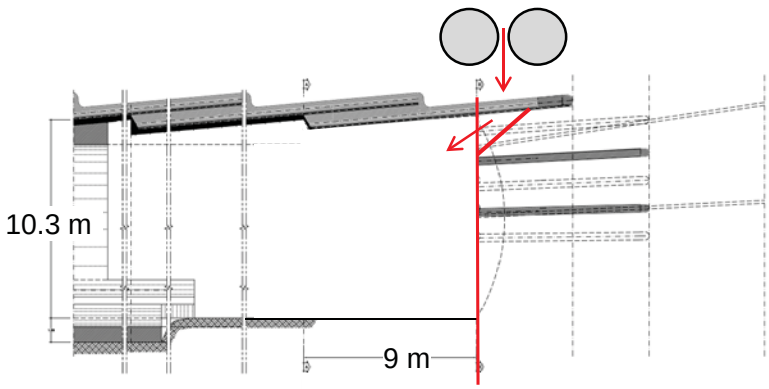

Tunnel construction problems and design changes

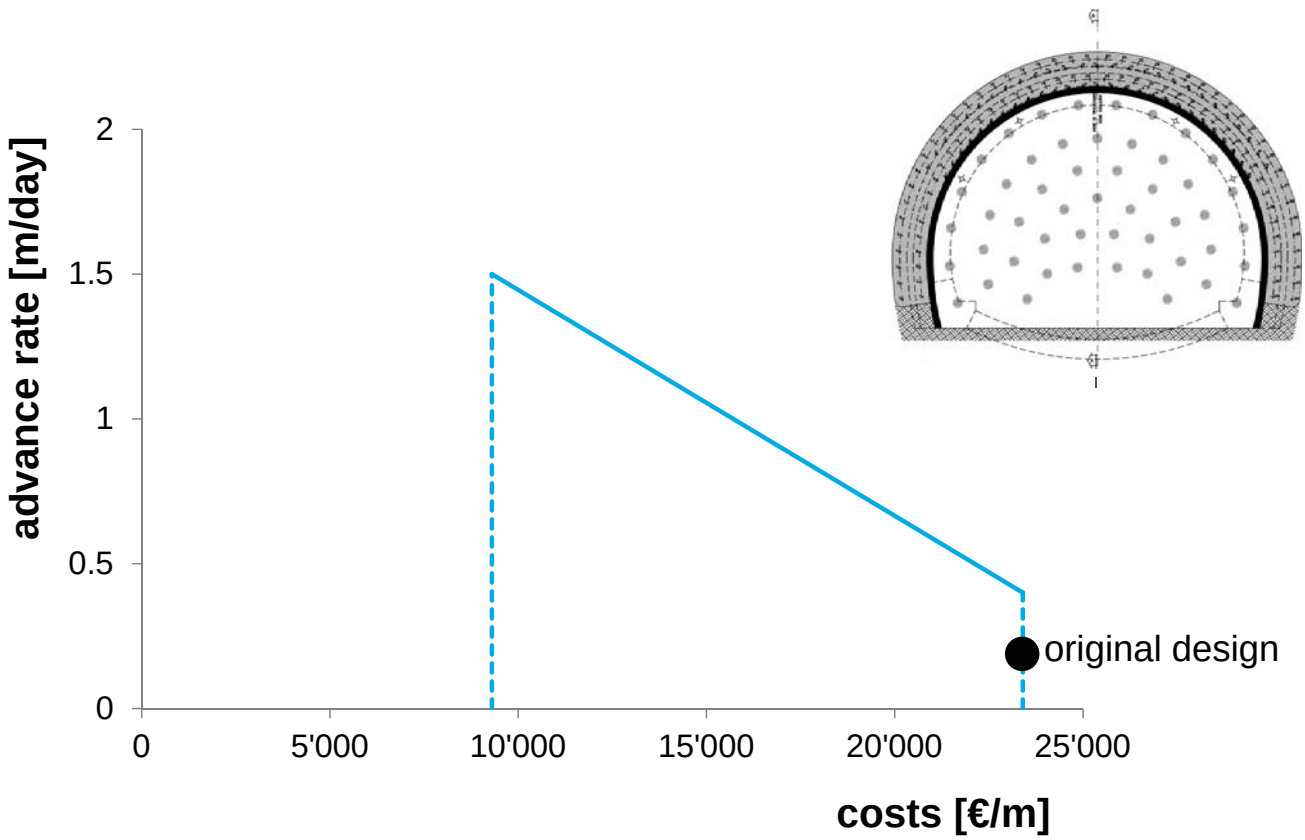

Tunnel construction problems and design changes

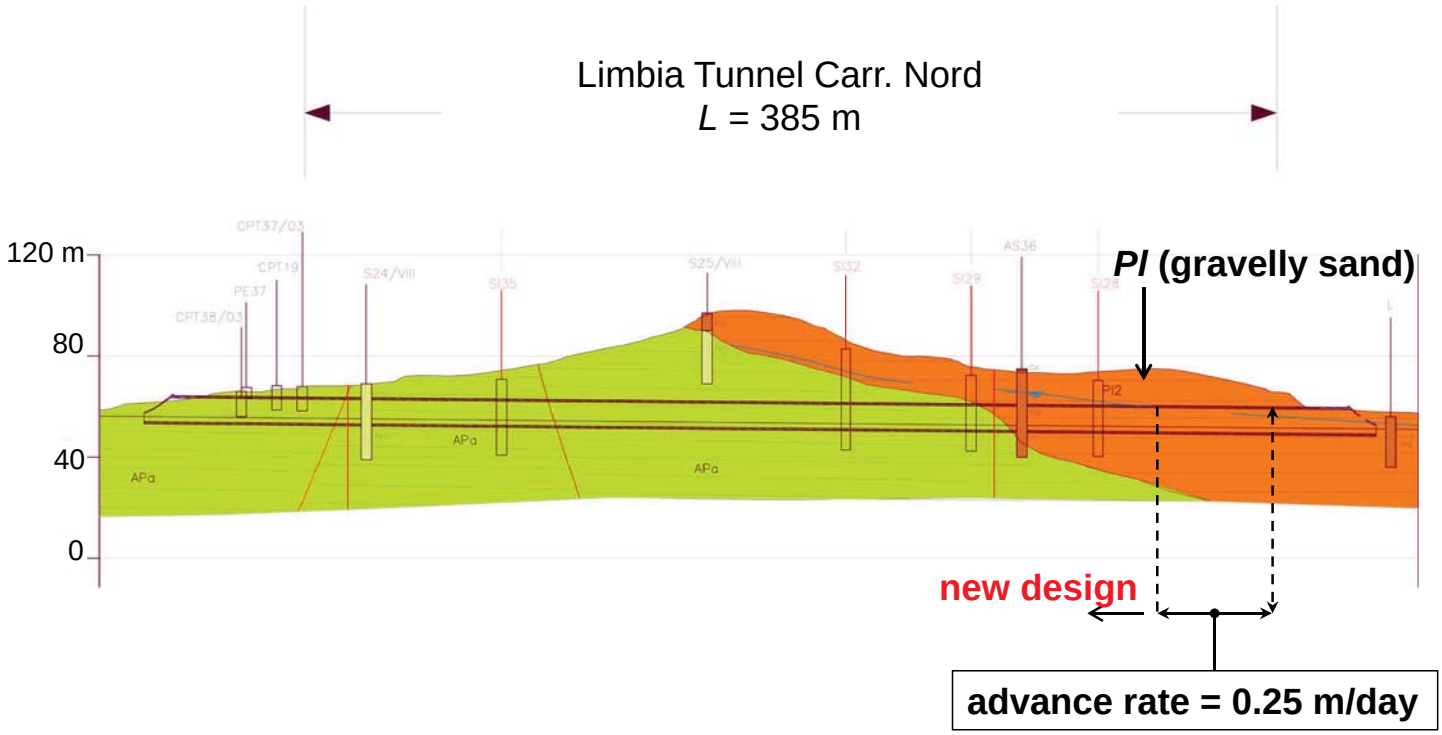

Tunnel construction problems and design changes

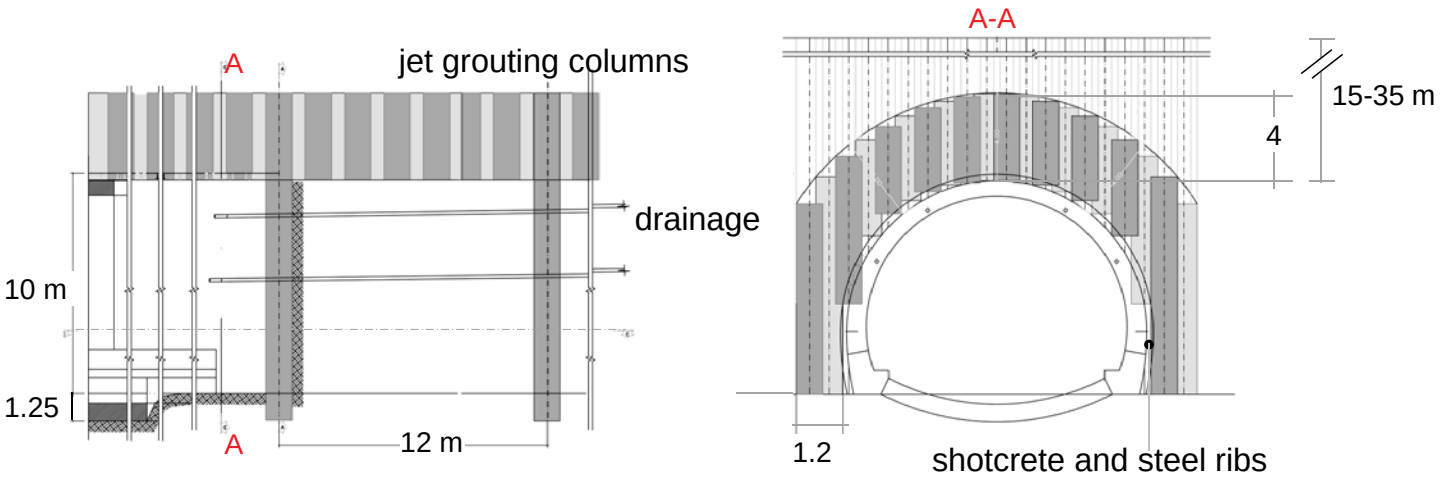

Tunnel construction problems and design changes

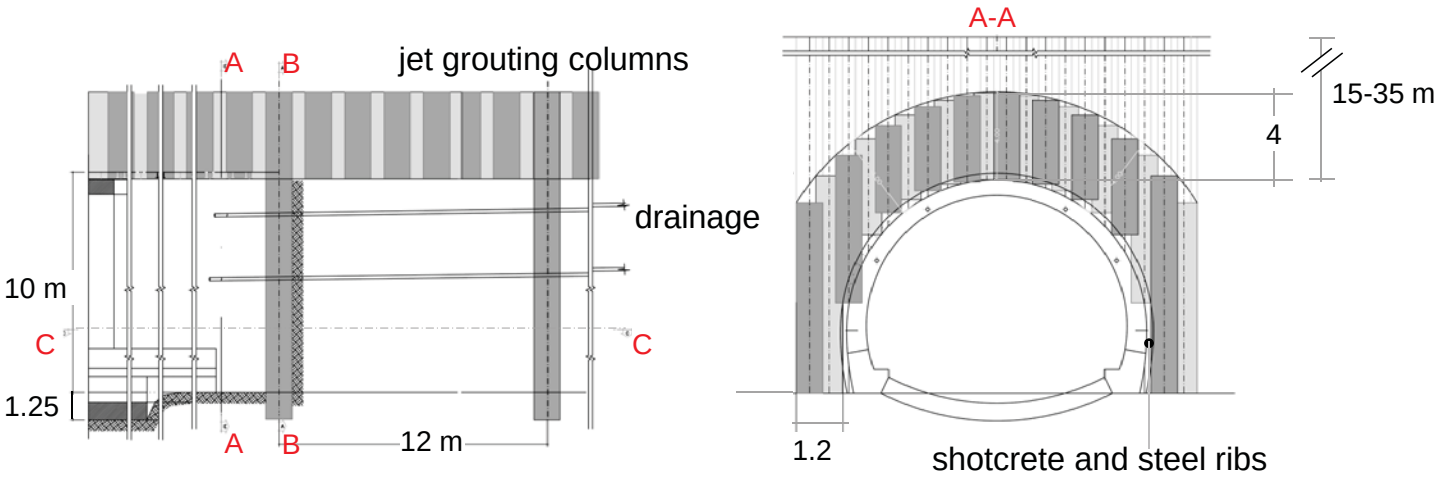

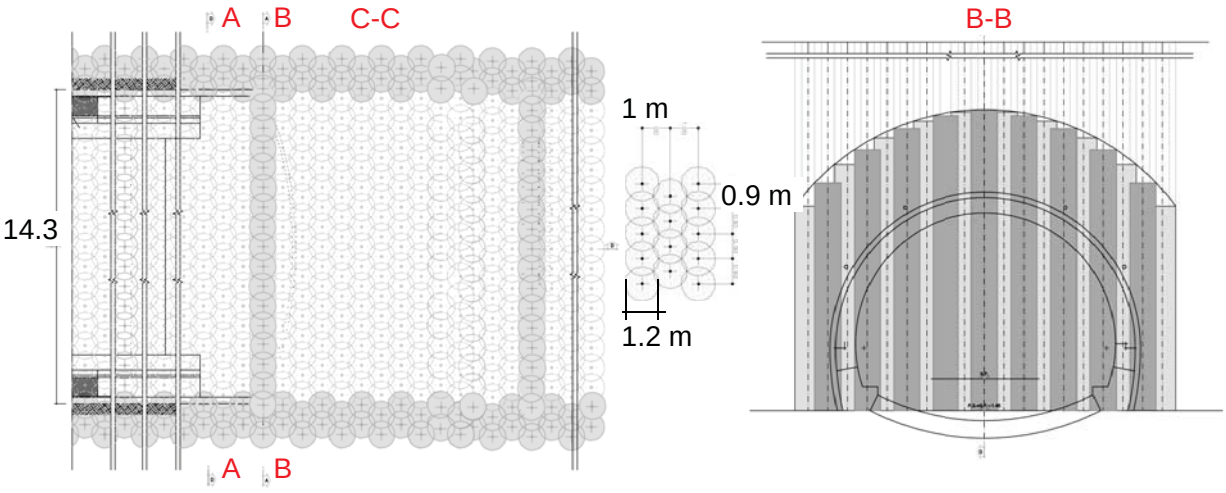

Tunnel construction problems and design changes

ASTALDI

In situ jet grouting tests

Mono fluid system

Grout pressure	40 MPa
Number of nozzles	2
Nozzle Diameter	4 mm
W-C ratio by weight	1
Grout flow rate par nozzle	160 l/min

Injected grout volume per unit length	733 l/m	800 l/m	933 l/m
Average lifting speed of the monitor	7.3 mm/s	6.7 mm/s	5.7 mm/s
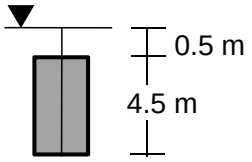	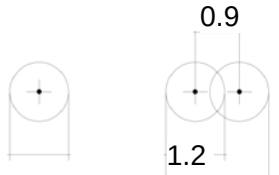	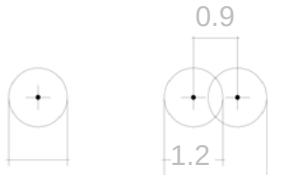	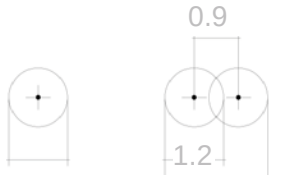
Design values →	D_t =1.2 m L_t = 2.1 m	D_t =1.2 m L_t = 2.1 m	D_t =1.2 m L_t = 2.1 m
Observed →	D_m =1.04 m L_m =2.03 m	D_m =1.06 m L_m =2.07 m	**D_m =1.25 m L_m =2.15 m**

Tunnel construction problems and design changes

ASTALDI

In situ jet grouting tests

Mono fluid system
Design values

Grout pressure	40 MPa
Number of nozzles	2
Nozzle Diameter	4 mm
W-C ratio by weight	1
Grout flow rate par nozzle	160 l/min
Injected grout volume per unit length	969 l/m
Average lifting speed of the monitor	5.5 mm/s

Injected grout volume per unit length	733 l/m	800 l/m	933 l/m
Average lifting speed of the monitor	7.3 mm/s	6.7 mm/s	5.7 mm/s
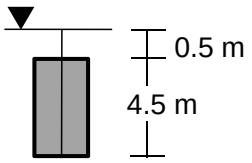	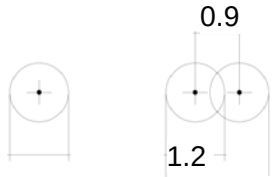	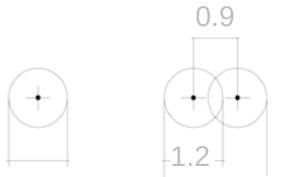	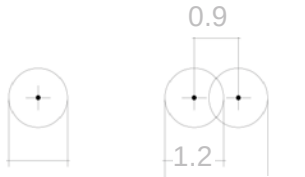
Design values →	D_t =1.2 m L_t = 2.1 m	D_t =1.2 m L_t = 2.1 m	D_t =1.2 m L_t = 2.1 m
Observed →	D_m =1.04 m L_m =2.03 m	D_m =1.06 m L_m =2.07 m	**D_m =1.25 m L_m =2.15 m**

Tunnel construction problems and design changes

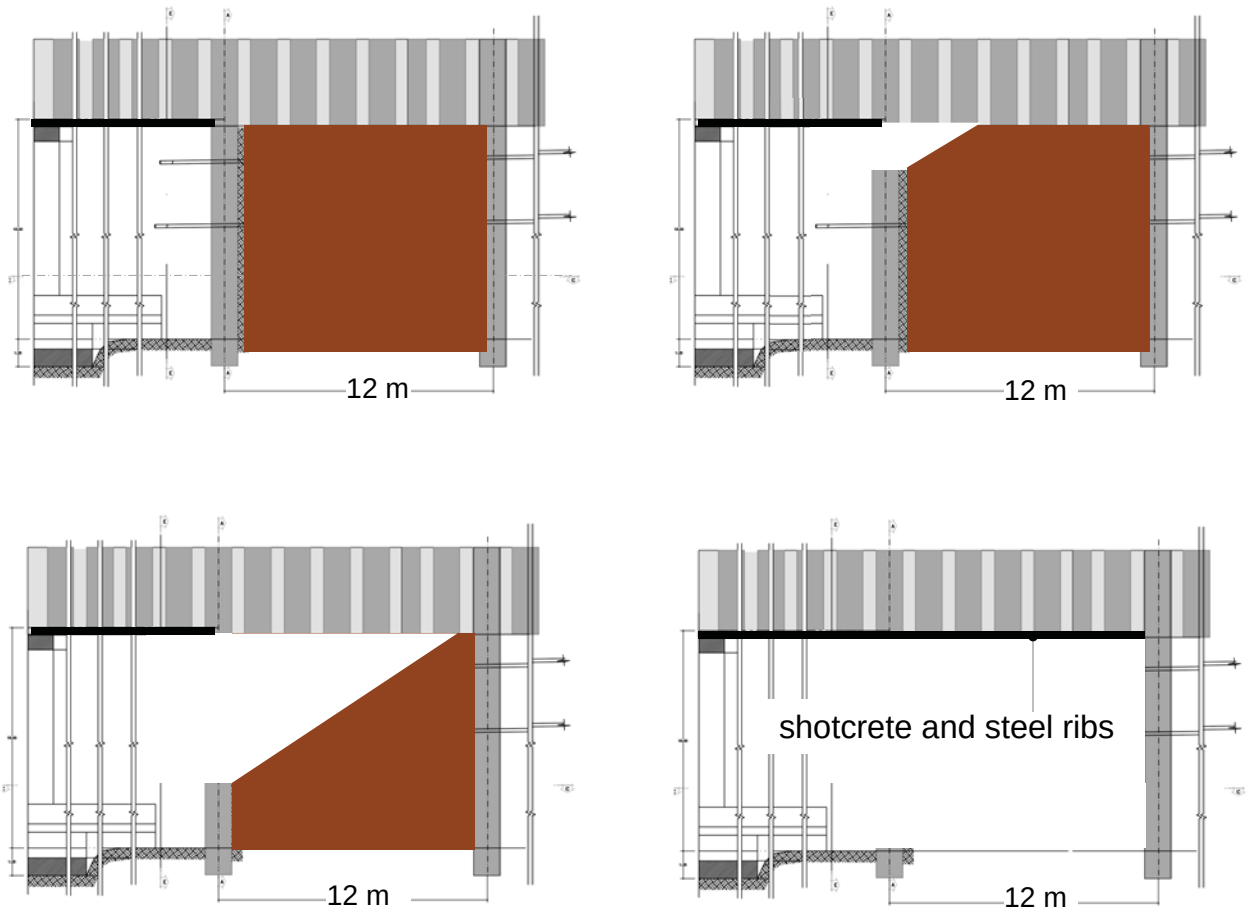

Tunnel construction problems and design changes

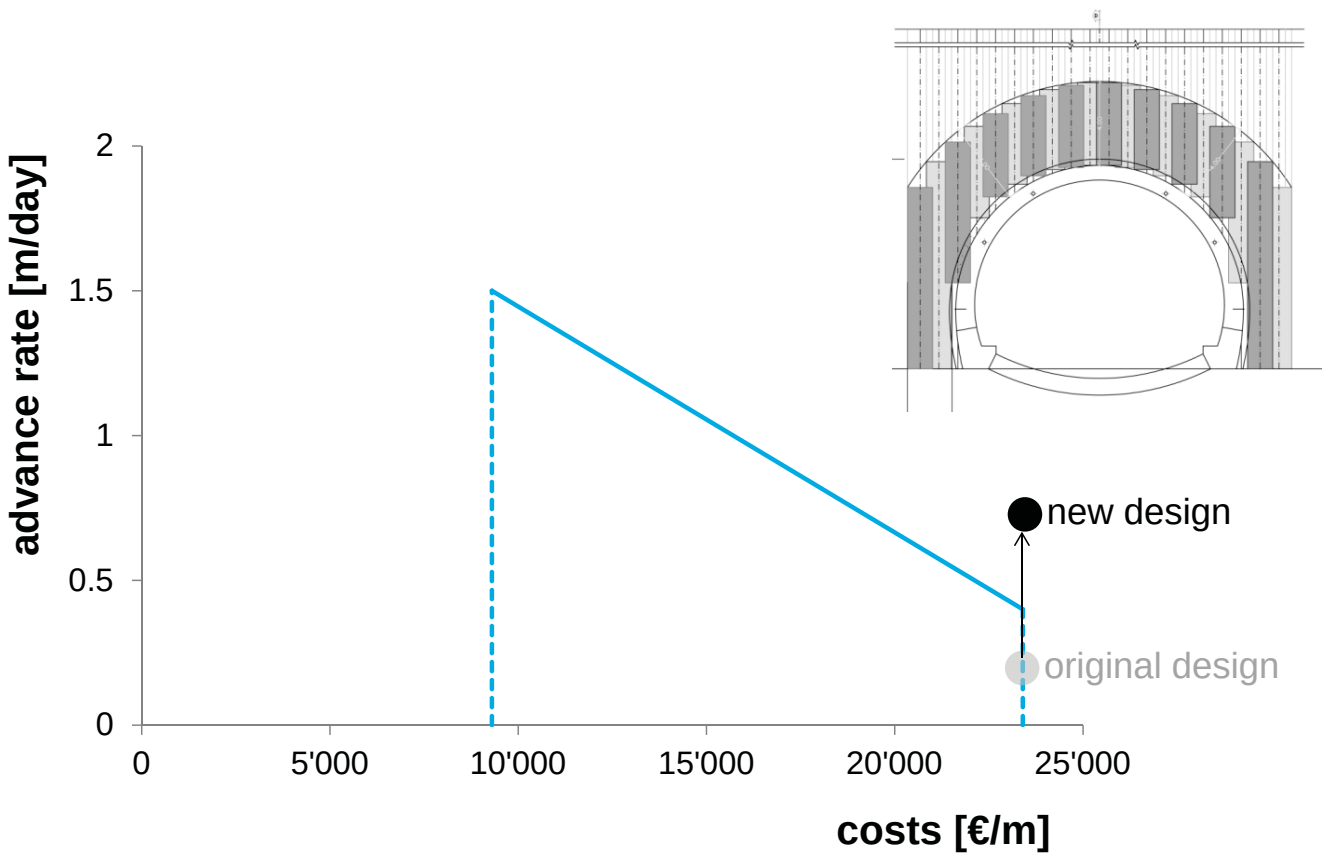

Tunnel construction problems and design changes

ASTALDI

Trigoni Tunnel Carr. Sud
L = 880 m

***Ap* (silty clay)**

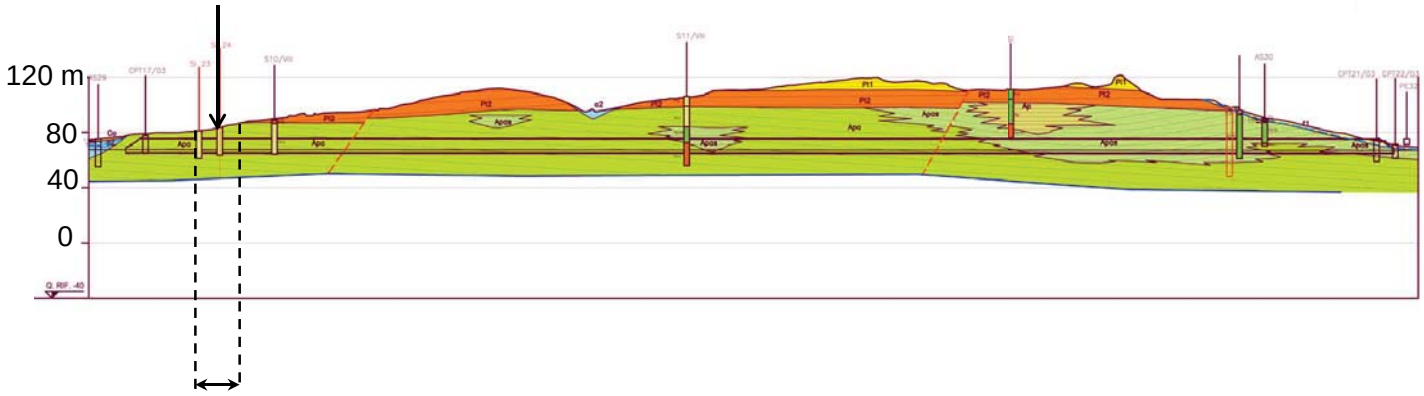

considered section

Tunnel construction problems and design changes

ASTALDI

Ap **Trubi formation (silty clay, clayey silt)**

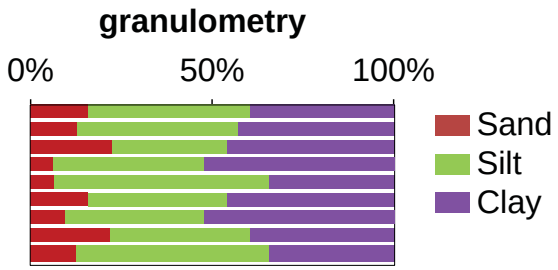

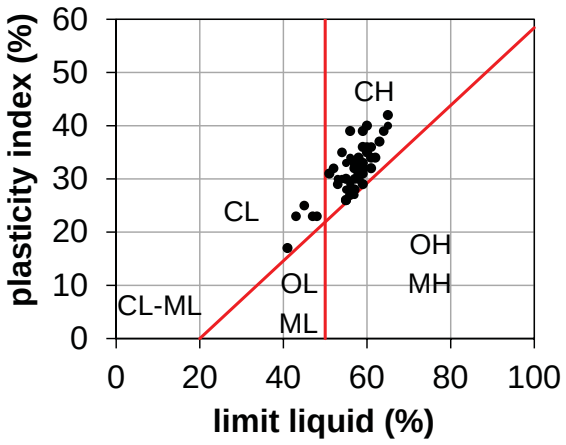

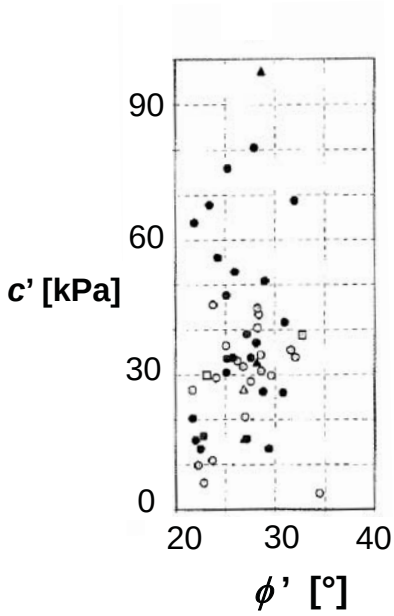

Tunnel construction problems and design changes

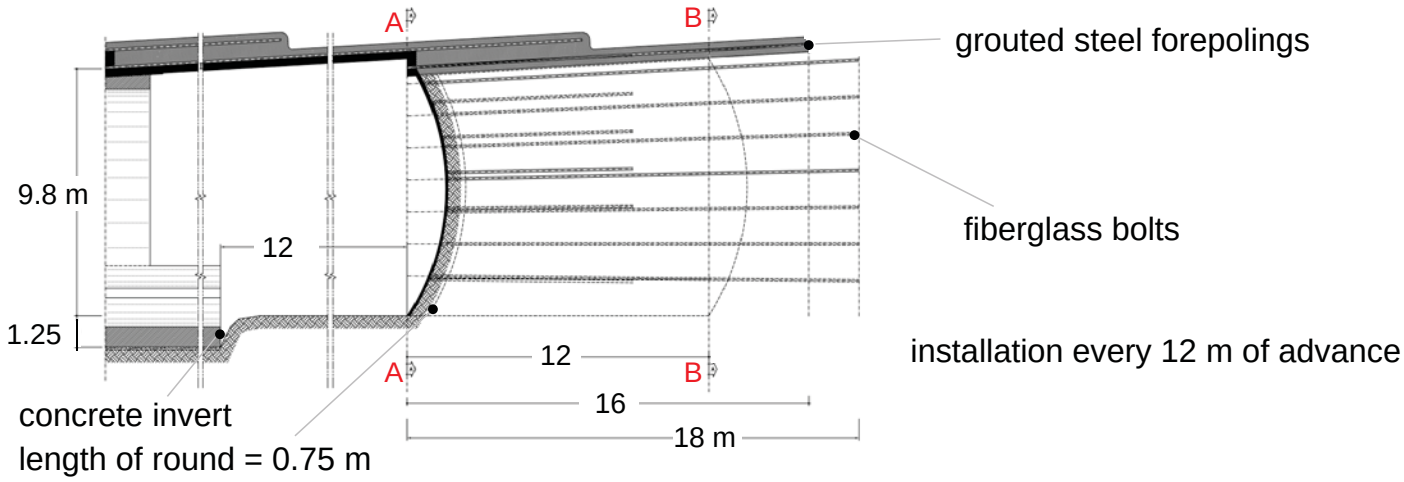

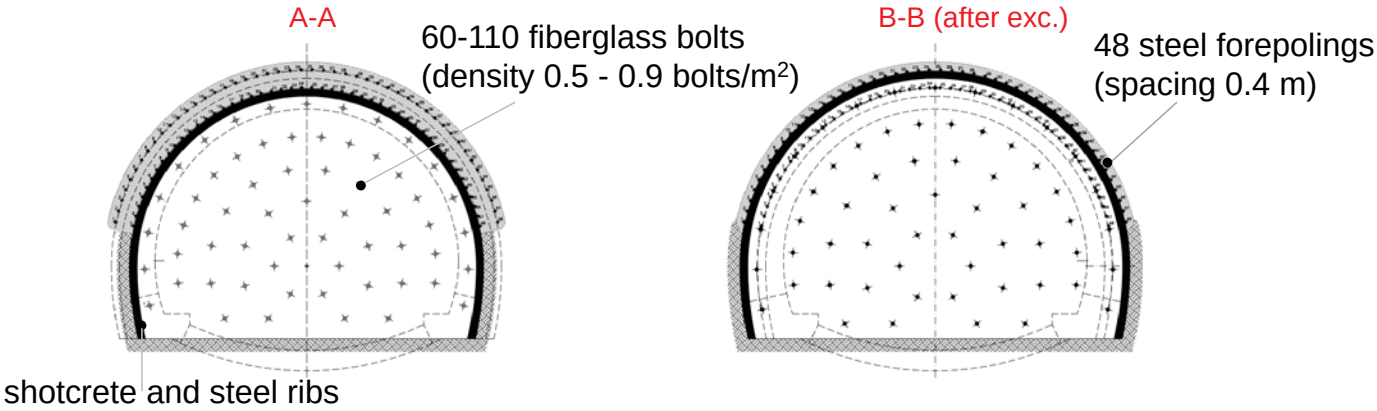

Tunnel construction problems and design changes

surface fractures induced by the excavation

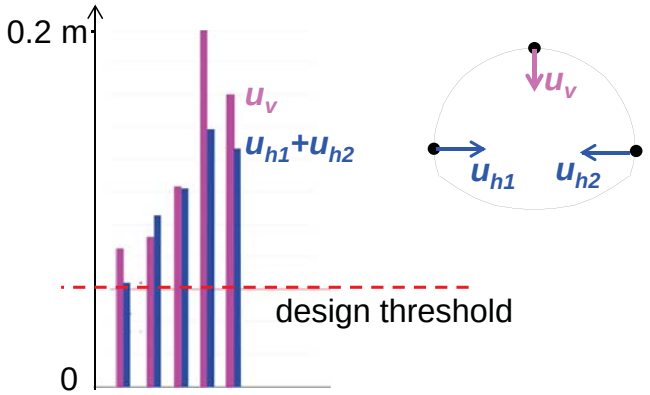

re-profiling of the tunnel section in order to guarantee the minimum clearance profile

monitoring stations in a distance of 24 m from the tunnel face

Tunnel construction problems and design changes

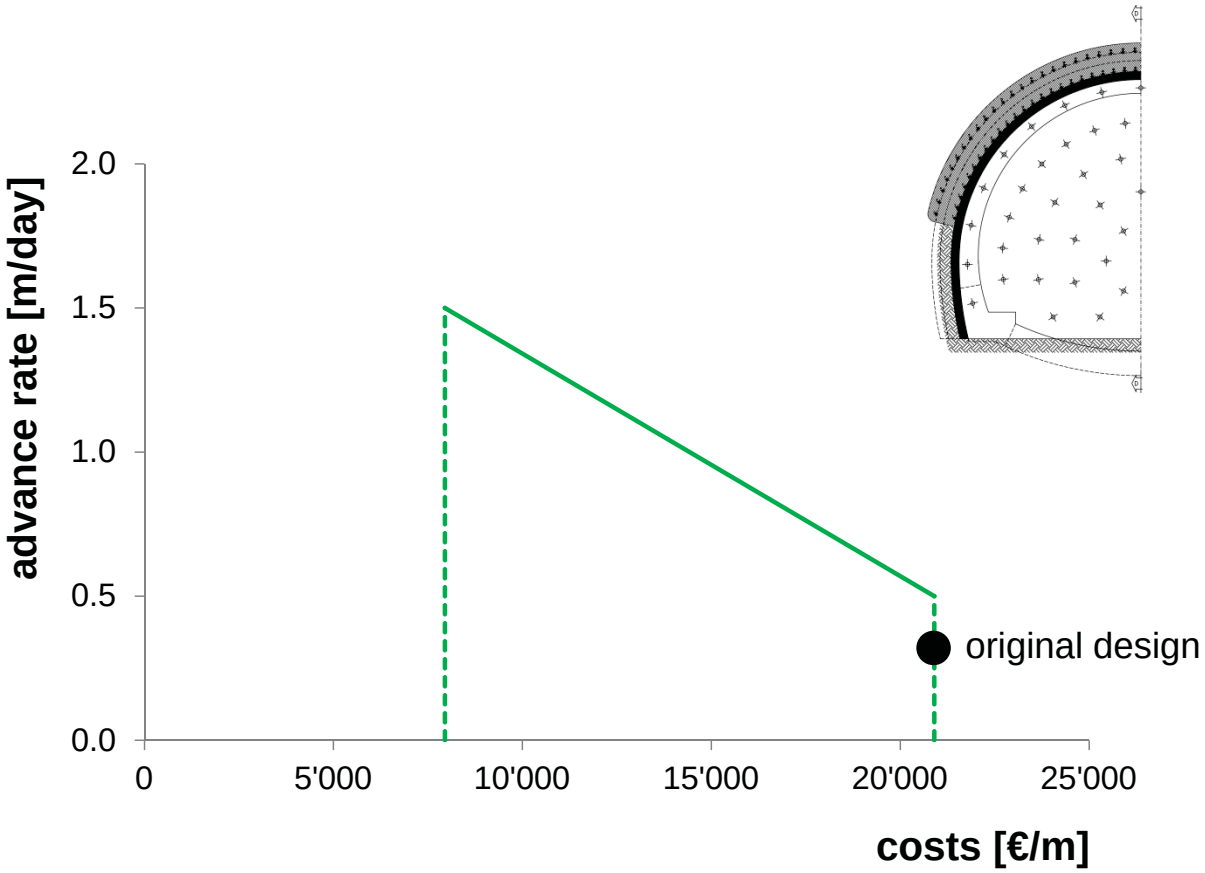

Tunnel construction problems and design changes

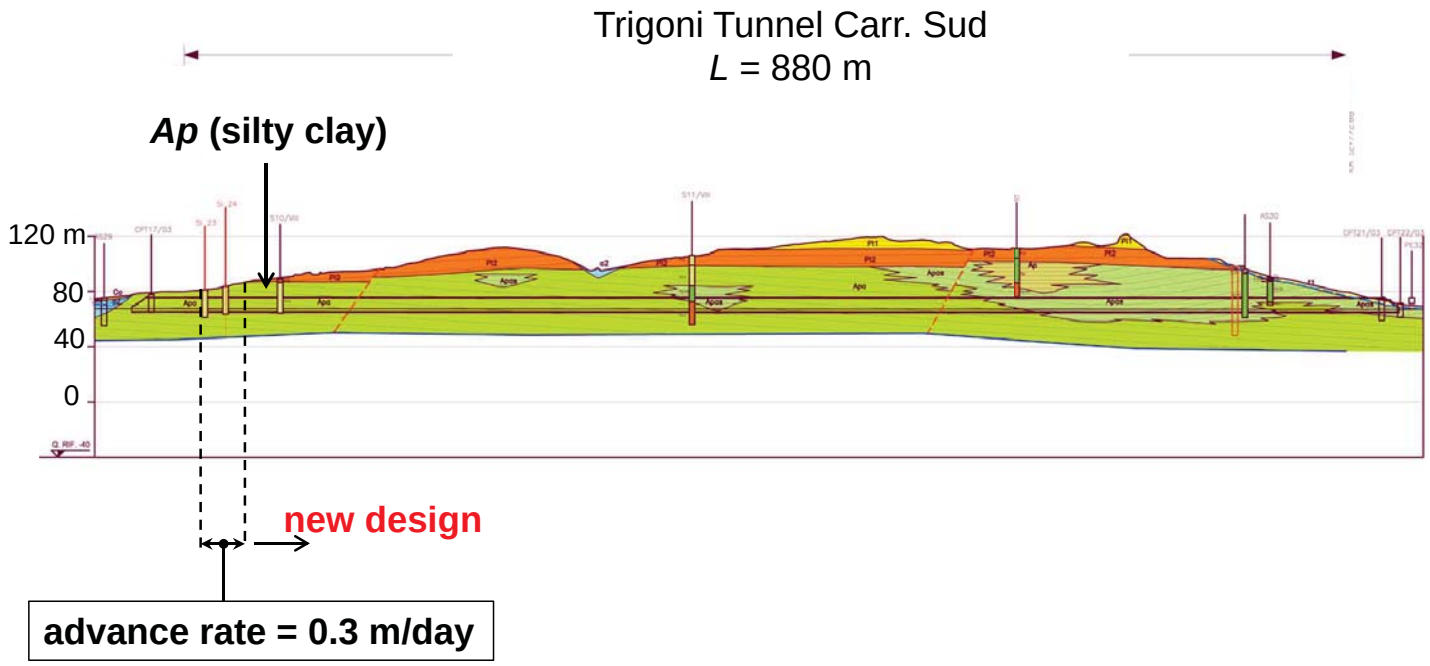

Tunnel construction problems and design changes

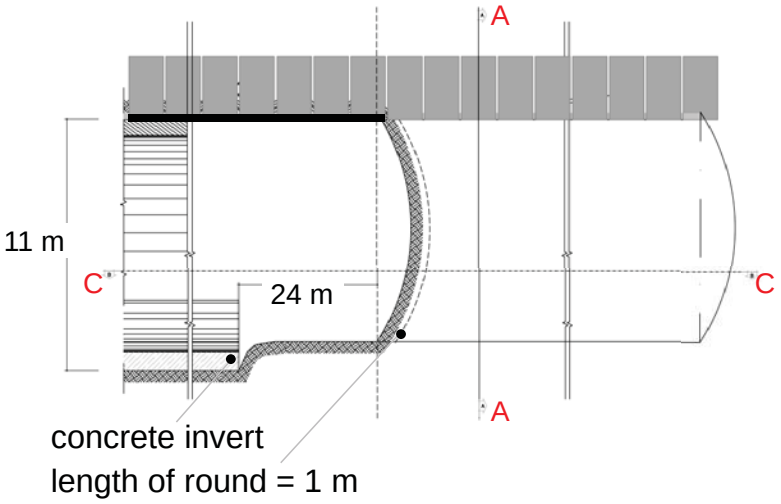

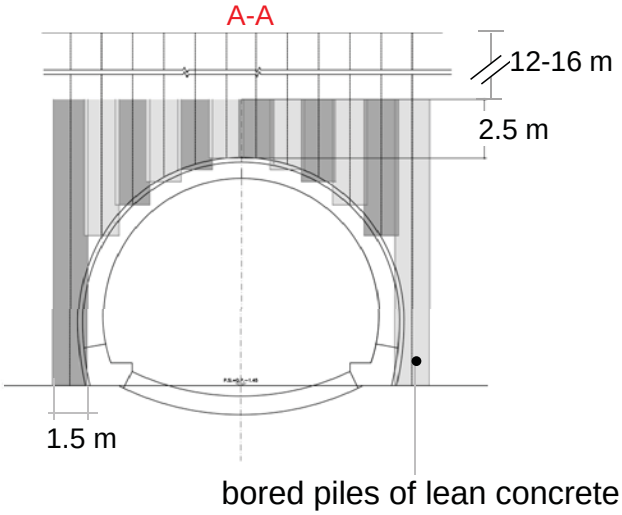

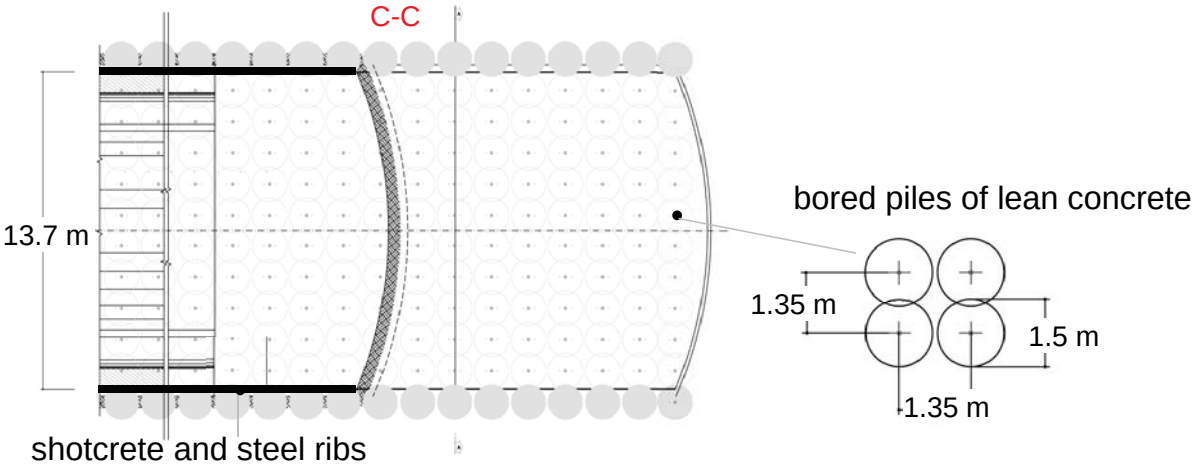

Tunnel construction problems and design changes

bottom of the bored piles

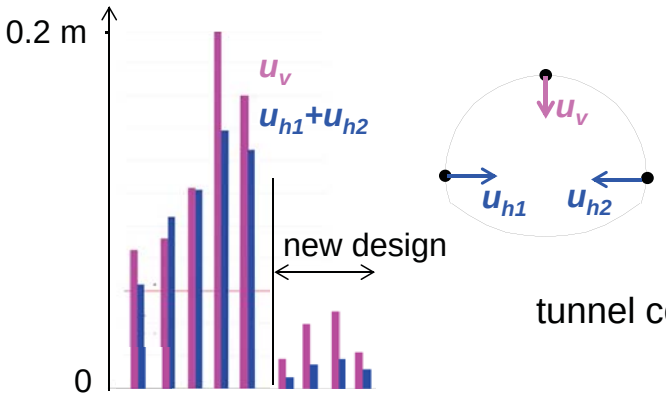

tunnel convergences strongly reduced

monitoring stations in a distance of 24 m from the tunnel face

Tunnel construction problems and design changes

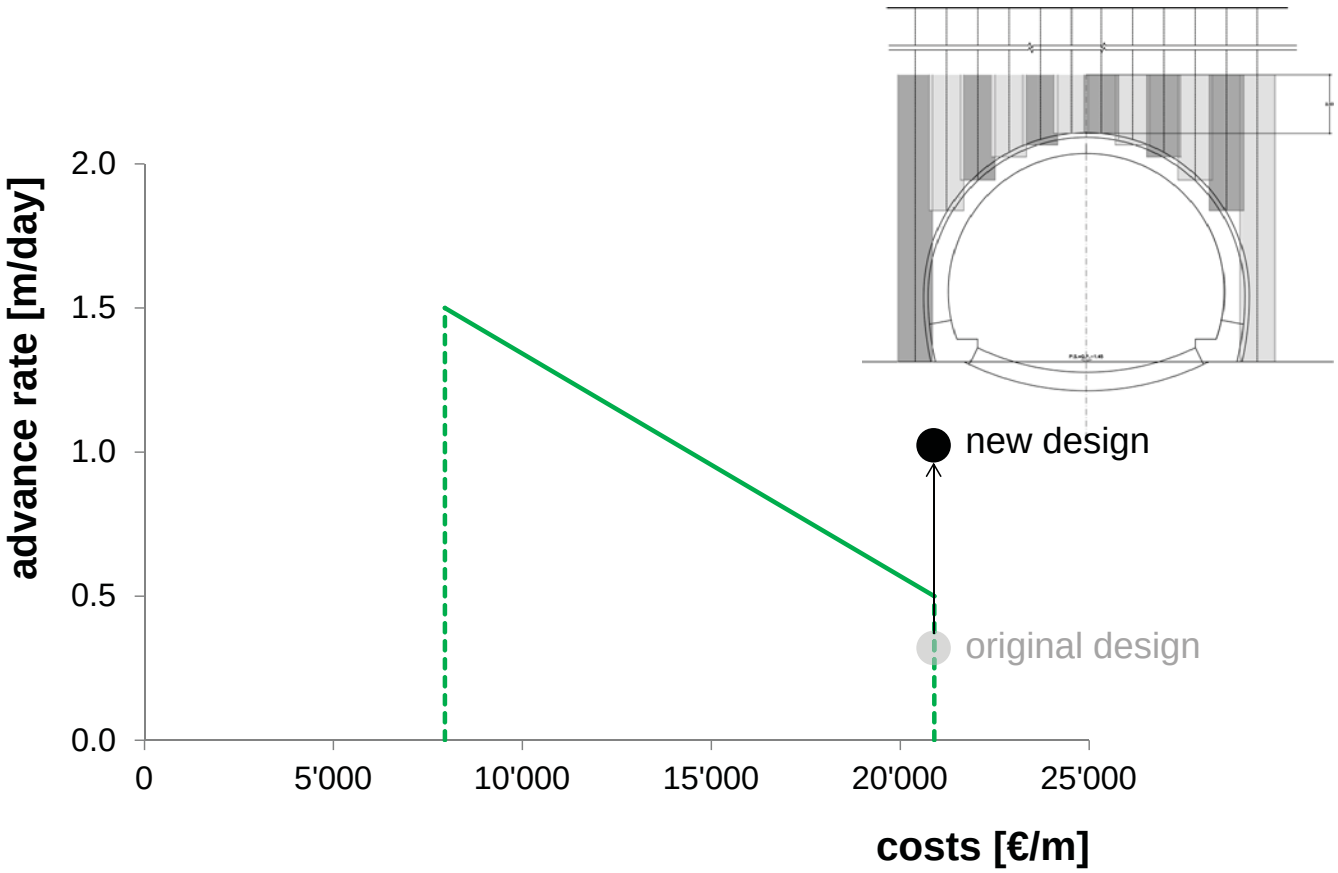

Tunnel construction problems and design changes

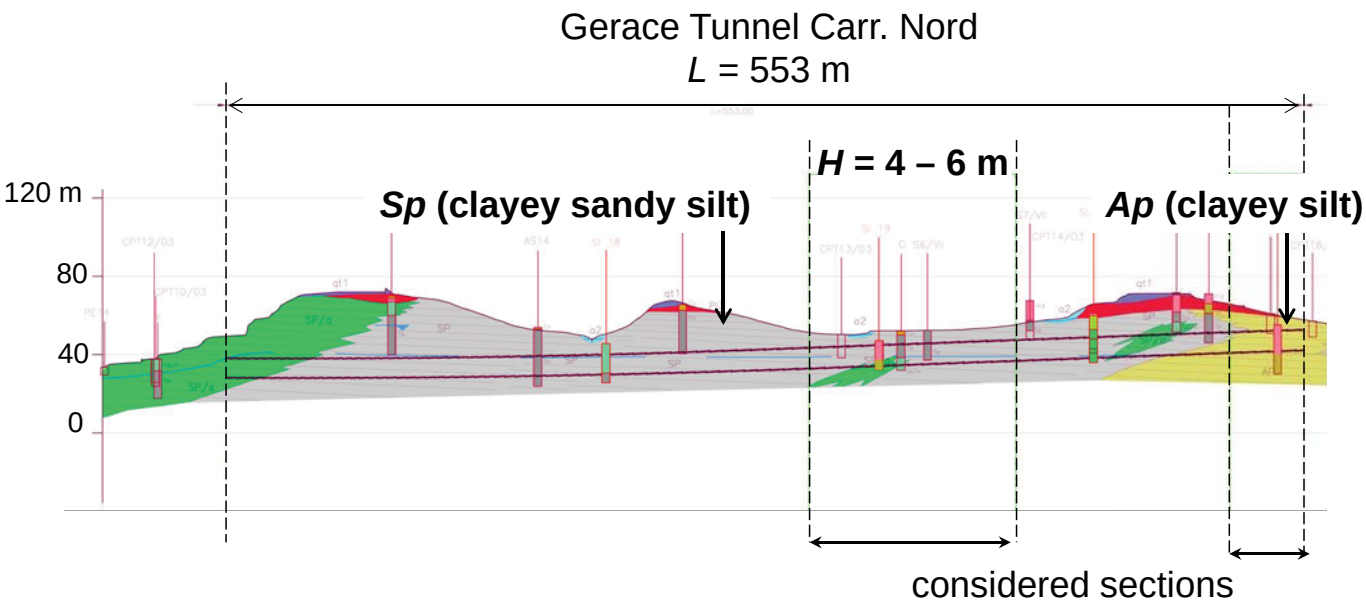

Tunnel construction problems and design changes

ASTALDI

Ap Trubi formation (clayey silt)

Sp Trubi formation (clayey sandy silt)

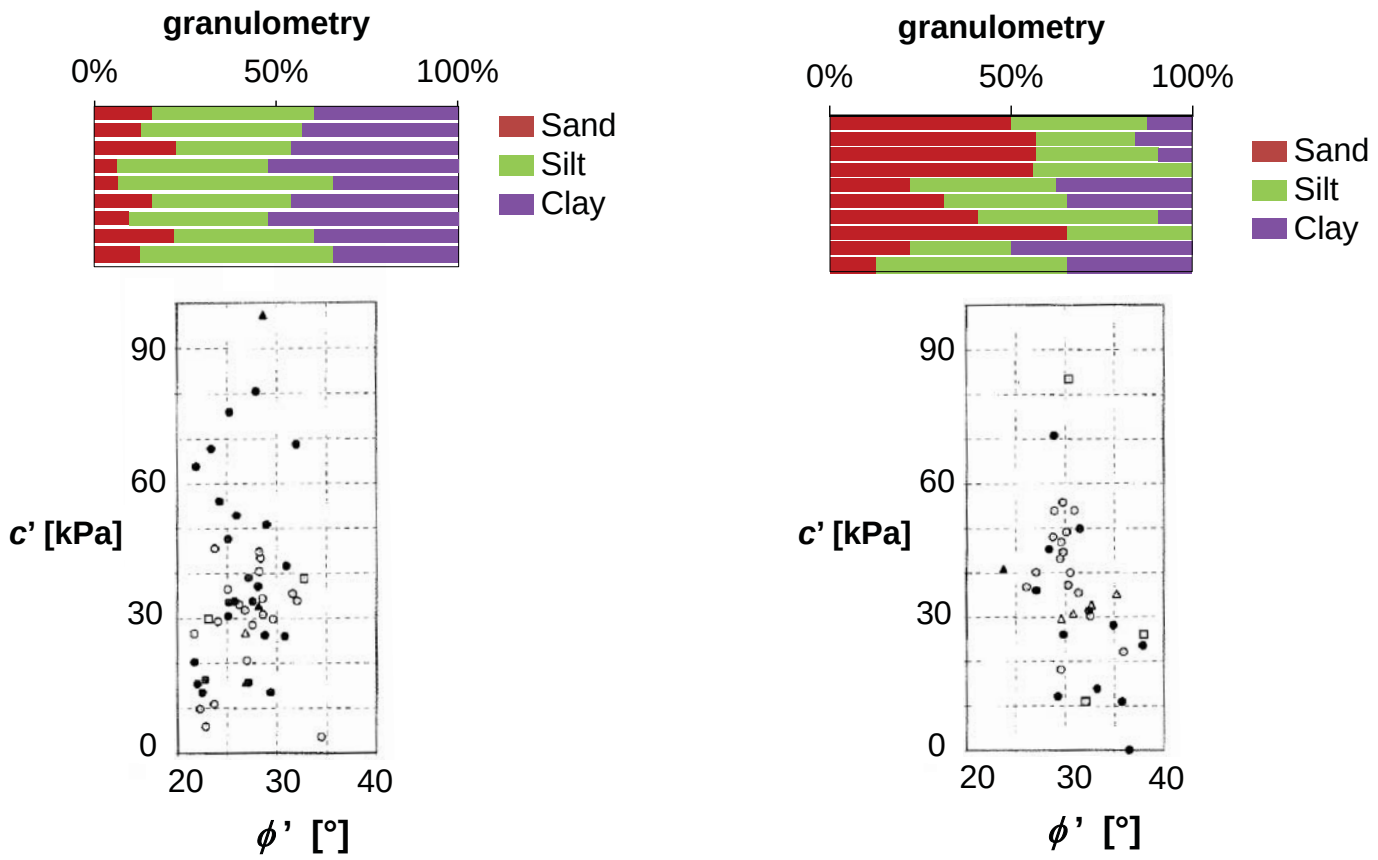

Tunnel construction problems and design changes

ASTALDI

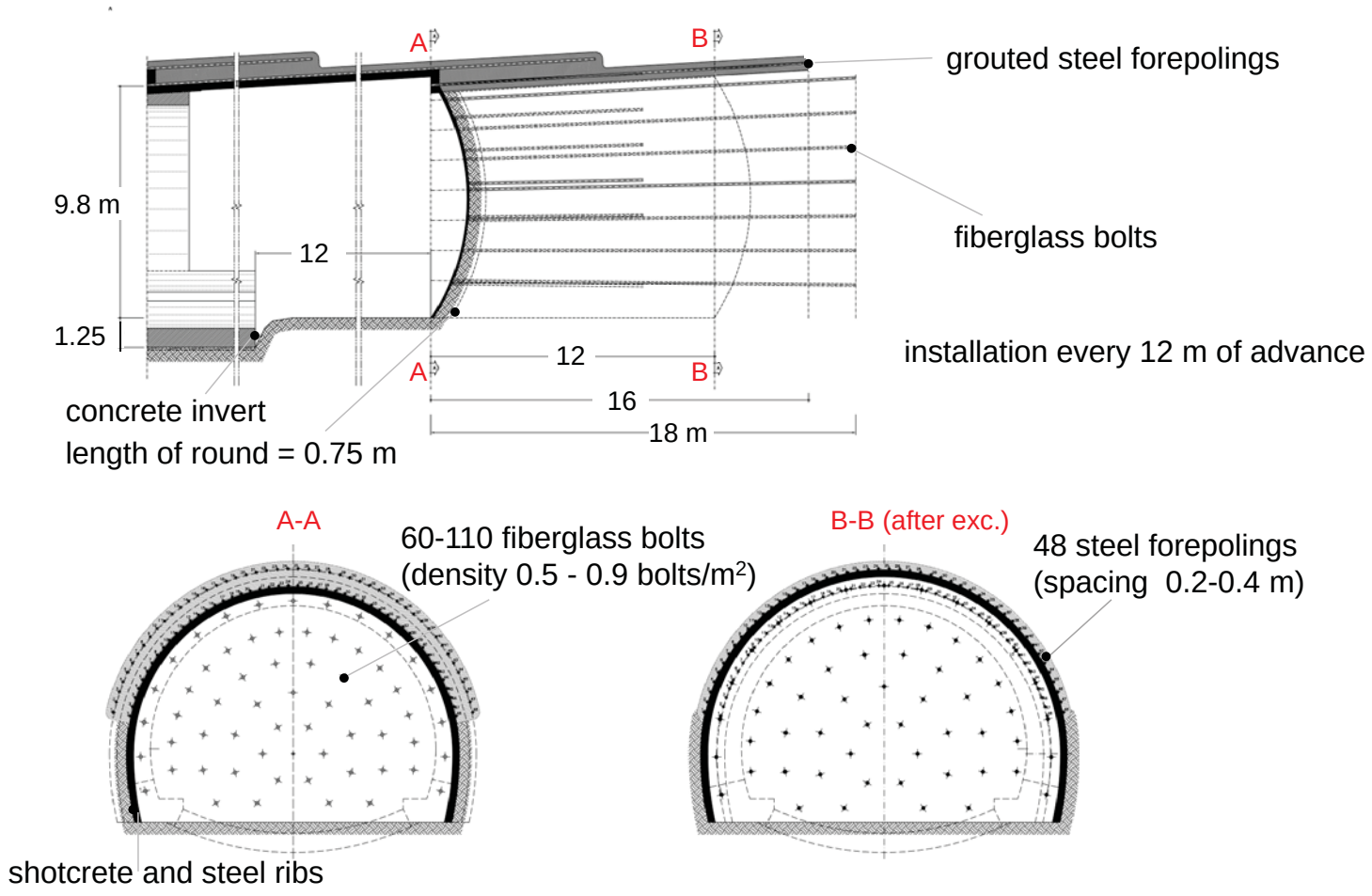

Tunnel construction problems and design changes

Face instability

Tunnel construction problems and design changes

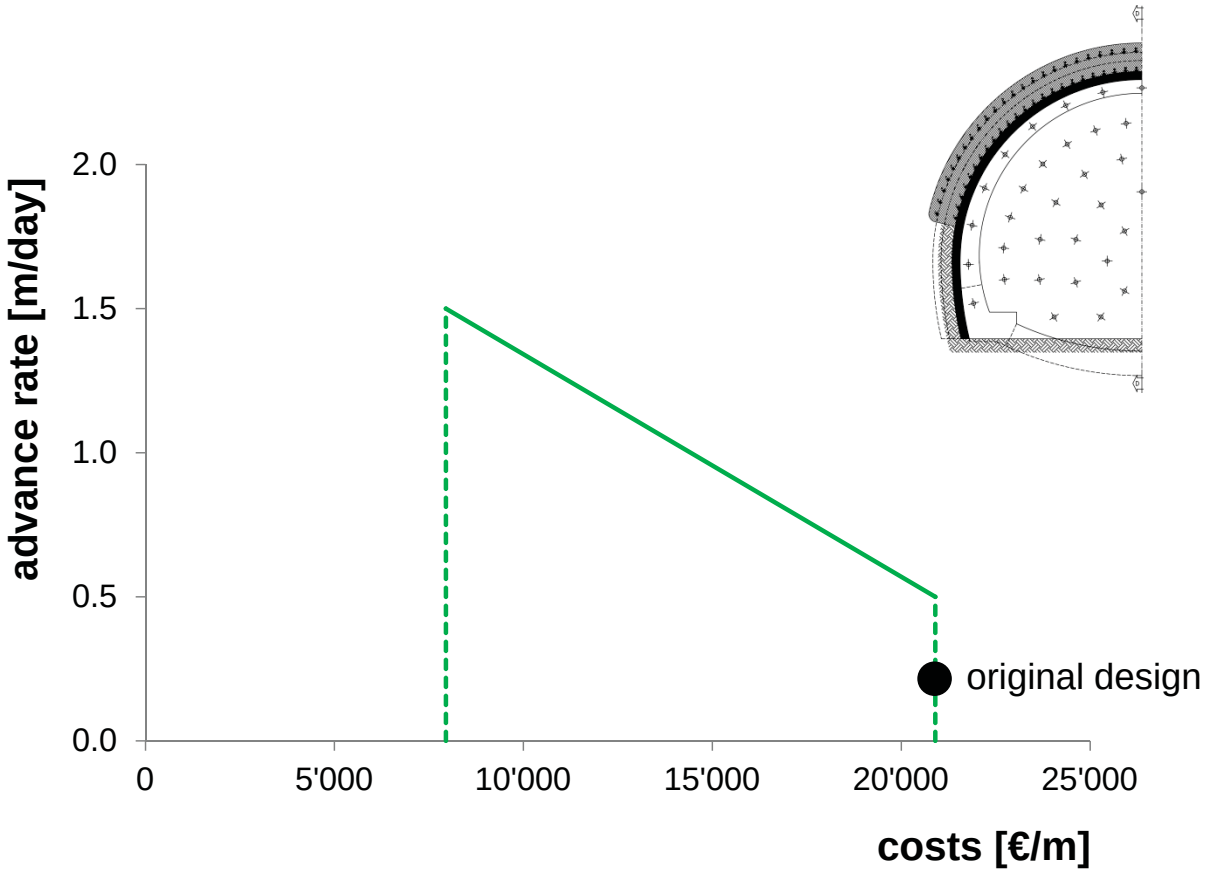

Tunnel construction problems and design changes

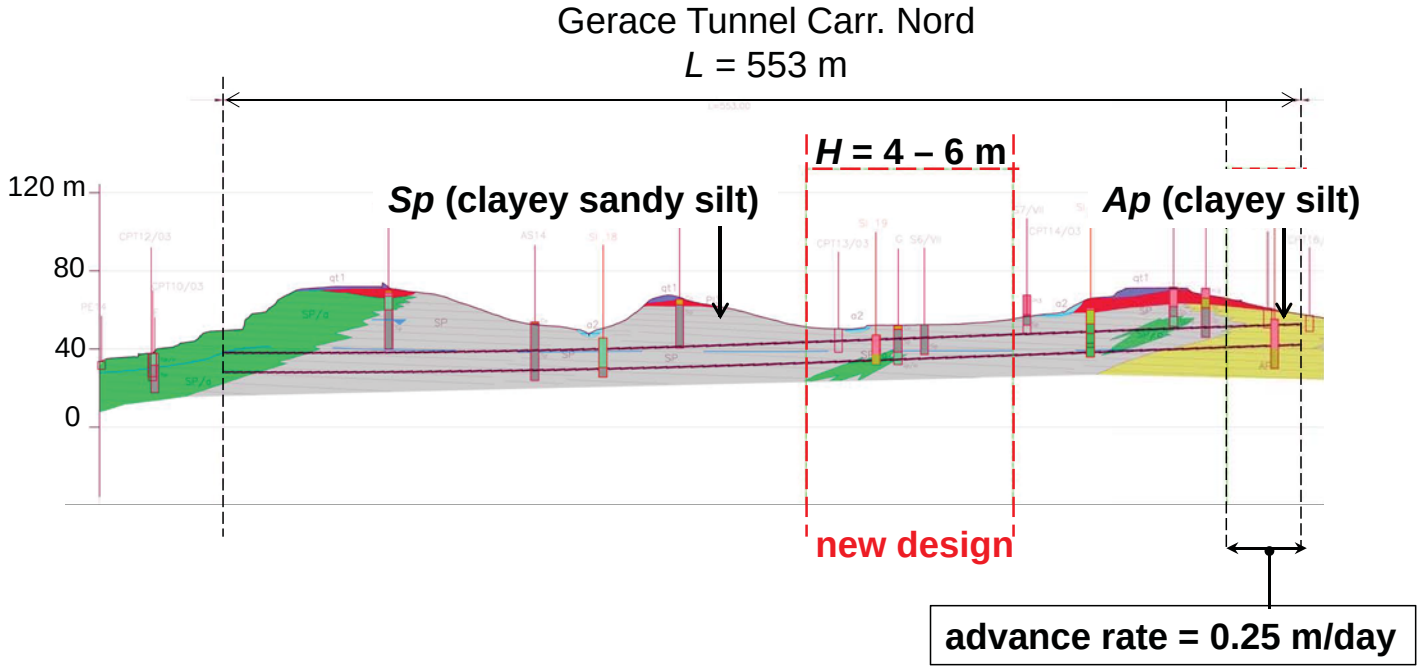

Tunnel construction problems and design changes

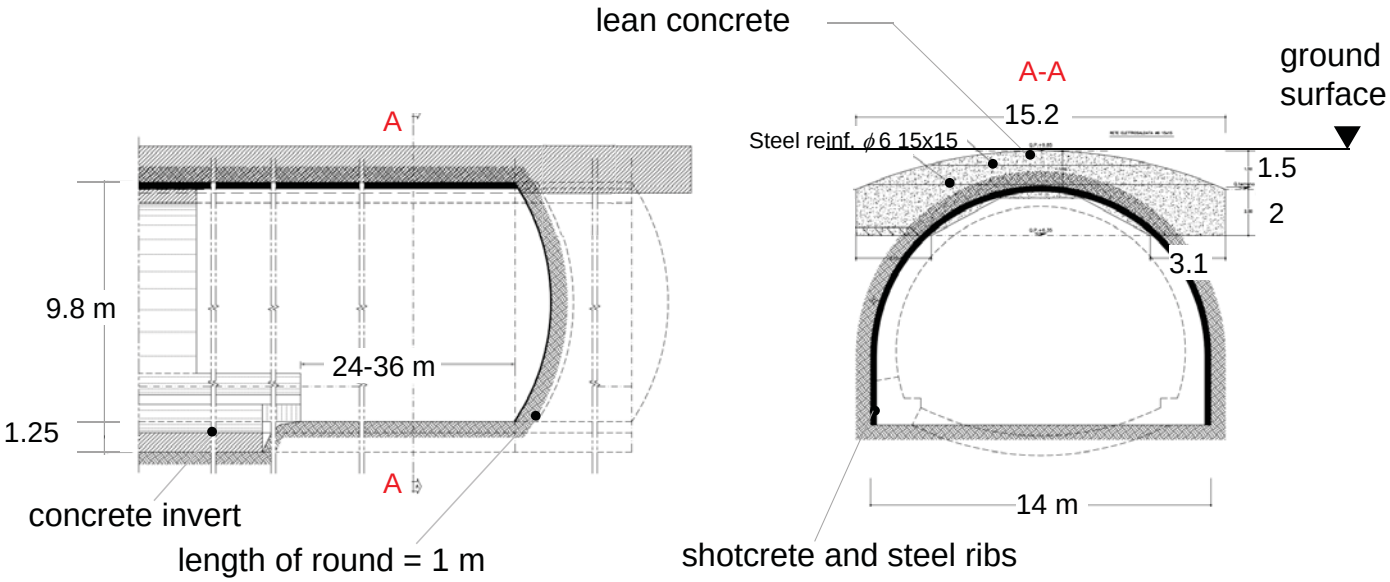

Tunnel construction problems and design changes

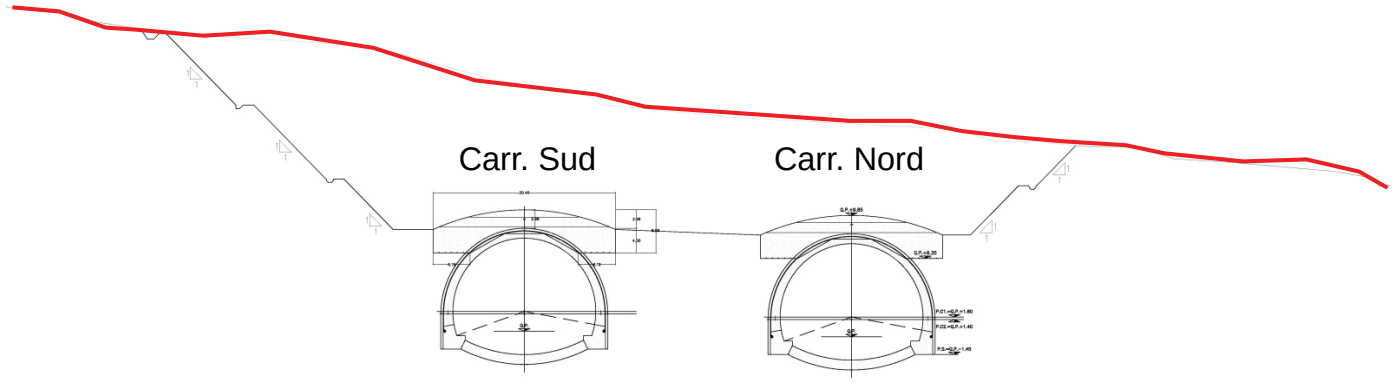

Tunnel construction problems and design changes

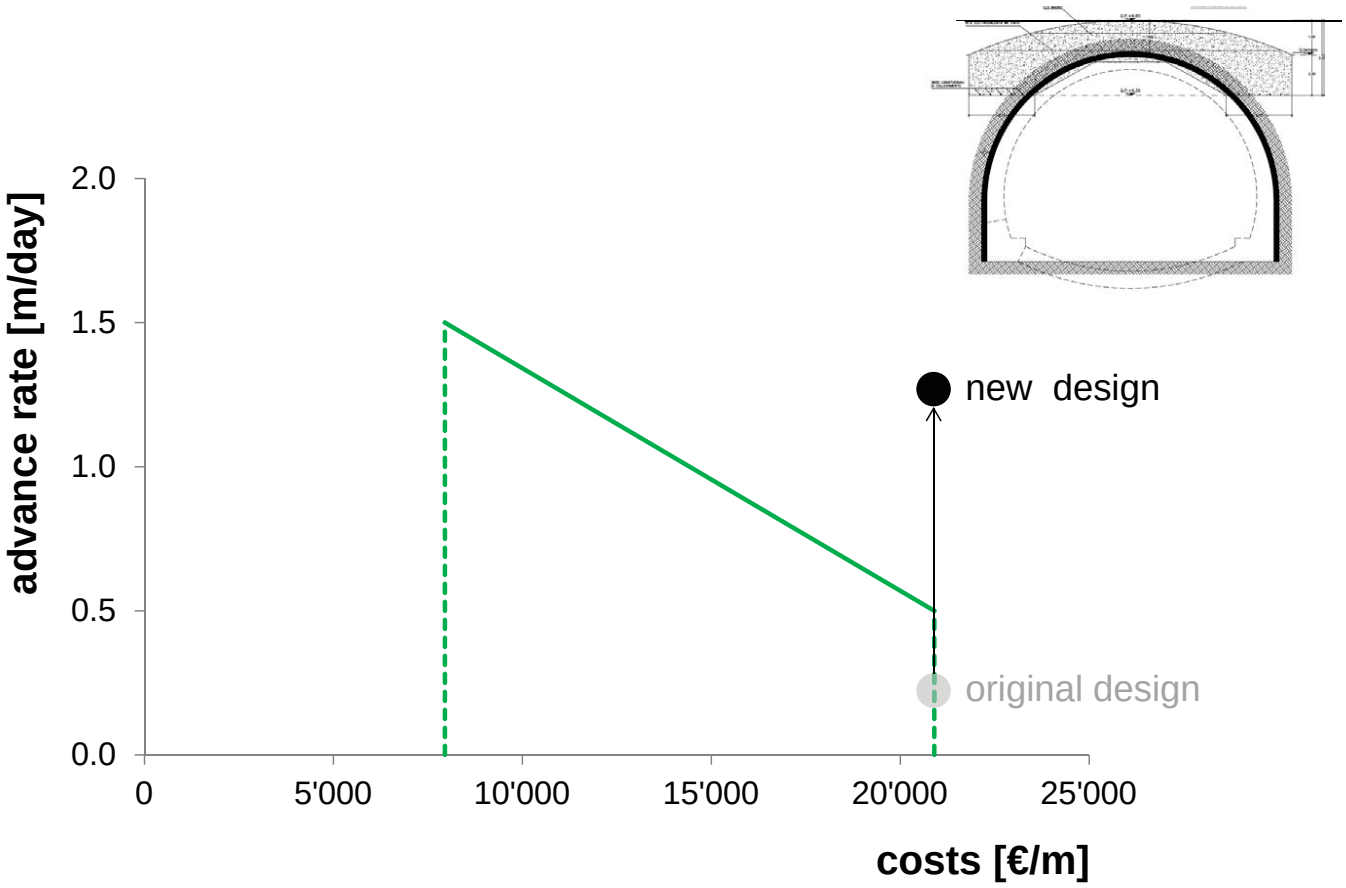

Conclusions

Contractual obligations (construction time and costs) & uncertainties in the design phase

↓

flexibility in the execution phase